SHORT TRANSMISSION LINE- PERFORMANCE CHART

OBJECT:

To perform load tests o a short transmission line and to draw its receiving end performance chart with special reference to the line's static power limit.

THEORY: Read 'Electrical Power Systems' by Guile & Patterson Vol.1 pp 20-22

APPARATUS:

1. You may use the following as a short transmission line model.

   Foster 3-phase reactor: A & B phases in series- phase windings in parallel- core fully inserted

2. Supply- 10 A variac
3. Instruments: Two 300 V AC Voltmeters, One 1/5 A ,120/240 V Wattmeter, one 2/5/10A AC ammeter
4. Load: Capacitance box & resistance bank connected in parallel.

PROCEDURE

1. Carry out a short circuit test on the short transmission line (represented by the reactor) to find its impedance and angle. Select the most suitable instrument settings.
2. Use the circuit shown below for the load tests
3. Carry out a load test by increasing the value of capacitance until the power passes through a maximum. Use the resistance bank to maintain Vs = Vr. Steps of 5 µF are suggested. Prepare a table of values to record all quantities. The table should have space for reactive volt-amperes,
4. Take the capacitor out of circuit leaving a purely resistive load. Increase the current from zero to the maximum possible with the variac, maintaining Vr = 200 V. Record voltage, current and power.

RESULTS

1. Calculate the magnitude of the line impedance and the impedance angle.
2. Calculate the reactive volt-amperes for the load test to complete the table of values.
3. Construct scales for current and volt-amperes based on a voltage scale of 1cm = 20 V, an prepare the receiving end performance chart
4. Plot the value from the first load test using the value for active & reactive power.
5. Plot the points from the second load test using the values of Vs and power.
6. On the chart draw the locus of Vs = Vr, the static power limit & the stability limit.

7. Compare the measured value from each test with the corresponding theoretical value.
8. If Vs is limited to Vr + or - 15%, what is the maximum powr carried by the line with a resistive load?

CONCLUSIONS:

Do the results support the theory of the performance chart? How can the power transmitted by the line be increased whenVs = Vr? What are the limiting factors?

See the circuit diagram below

CIRCUIT

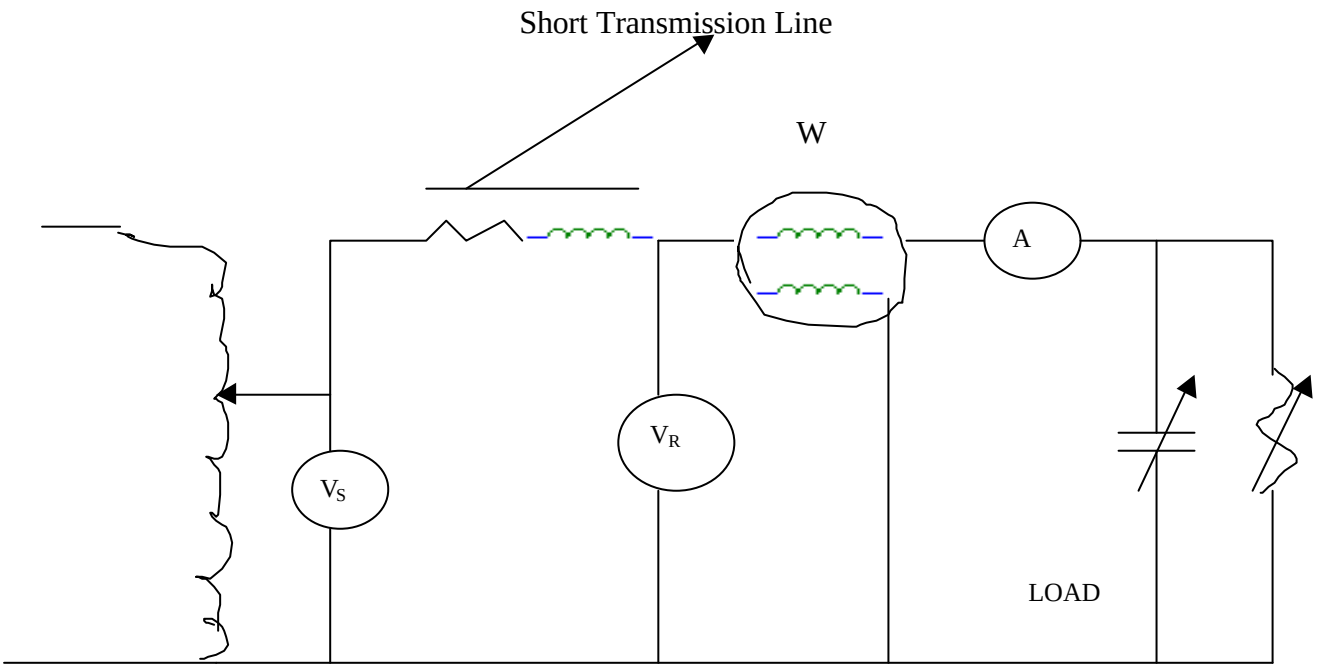

See the performance charts below

Performance Chart

First Load Test

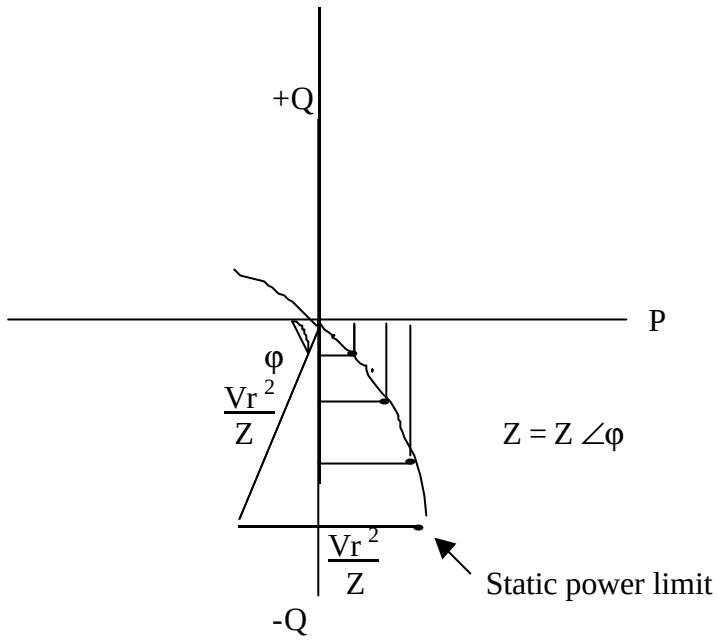

Second Load Test